**CLEAN DEVELOPMENT MECHANISM**
**SMALL-SCALE PROGRAMME OF ACTIVITIES DESIGN DOCUMENT FORM**
**(CDM-SSC-PoA-DD) Version 01**

**CONTENTS**



**Annexes**



NOTE:

(i) This form is for the submission of a CDM PoA whose CPAs apply a small scale approved methodology.

(ii) At the time of requesting registration this form must be accompanied by a CDM-SSC-CPA-DD form that has been specified for the proposed PoA, as well as by one completed CDM-SSC-CPA-DD (using a real case).

## SECTION A. General description of small-scale programme of activities (PoA)

### A.1 Title of the small-scale programme of activities (PoA):

>>
Programme CDM to Introduce the High-Performance Tenters to the Dye Works in Zhejiang Province, PR China

**Version**: 1
**Date**: ＊January 2011

### A.2.Description of the small-scale programme of activities (PoA):

>> The following information shall be included here:

**1. General operating and implementing framework of PoA**

The programme of activities, "Programme CDM to Introduce the High-Performance Tenter to the Dye Works in Zhejiang Province, PR China" (hereafter, "The PoA"), includes to introduce of the high-performance tenters that are used for drying and heat set in the dye works in Zhejiang Province, PR China, and to contribute to reduce energy consumption and CO2 emission. This programme is to be realized by replacing all or part of the existing tenters to the high-performance type.

The goal of the PoA is the distribution of the high-performance tenters, and the programme makes the fossil fuels (mainly coal) and electricity as the energy source for the tenters reduce.

Each small-scale CPA under the PoA will be implemented in a dye work within the geographical boundaries of Zhejiang Province, PR China. The PoA will be managed by the Coordinating/Managing Entity (CME).

**2. Policy/measure or stated goal of the PoA**

The goal of the PoA is the distribution of the high-performance tenters, and the programme makes the fossil fuels (mainly coal) and electricity as the energy source for the tenters reduce within the boundary of the PoA (Zhejiang Province, PR China). By implementing the PoA, direct CO2 emissions by consuming fossil fuels and indirect CO2 emissions by consuming electricity are to be reduced.

**3. Confirmation that the proposed PoA is a voluntary action by the coordinating/managing entity.**

There are neither mandatory/regulatory requirements to reduce energy consumption targeted the dye works nor mandatory/regulatory requirements to replace the tenters in them, both at the central government level and at the Zhejiang government level. The proposed PoA is a voluntary action by the CME, to promote the introduction of high-efficiency tenters in the dye works, which already have tenters.

### A.3. Coordinating/managing entity and participants of SSC-POA:

>> The following information shall be included here:

**1. Coordinating or managing entity of the PoA as the entity which communicates with the Board**

**Greenensign (Beijing) New Energy Technology Ltd.** is the CME of the PoA.

2. **Project participants being registered in relation to the PoA. Project participants may or may not be involved in one of the CPAs related to the PoA.**

**Greenensign (Beijing) New Energy Technology Ltd.** is the project participant for the PoA. Other project participants for individual CPAs will be identified in the respective CPA-DDs.

## A.4. Technical description of the small-scale programme of activities:

>>

### A.4.1. Location of the programme of activities:

>>
Zhejiang Province, PR China

#### A.4.1.1. Host Party(ies):

>>
PR China

#### A.4.1.2. Physical/ Geographical boundary:

>> Definition of the boundary for the PoA in terms of a geographical area (e.g., municipality, region within a country, country or several countries) within which all small-scale CDM programme activities (SSC-CPAs) included in the PoA will be implemented, taking into consideration the requirement that all applicable national and/or sectoral policies and regulations of each host country within that chosen boundary;

The PoA will be implemented within the geographical boundaries of Zhejiang Province, PR China.


**Figure-1 Zhejiang Province, PR China**

**A.4.2. Description of a typical small-scale CDM programme activity (CPA):**

>>

**A.4.2.1. Technology or measures to be employed by the SSC-CPA:**

>>

The SSC-CPAs linked to the PoA are the activities to introduce the tenters of the high-performance type. Tenter is the equipment to implement drying and heat set (reset of heat history within the processes of flatting/smoothing or sizing), which is one of the largest energy consumers among the processes of dyeing and manufacturing in the dye works.

By replacing them with the high-efficiency type of tenters developed in Japan originally, and applying the energy-efficient technology, large reduction of fossil fuels and electricity consumption will be achieved.

The technological characteristics are as follows:

1. With the remarkable compact-sized hot air circulating system, the exhaust gas rate is reduced to the very extreme.
2. With the extension (or shortening) of the entire width of nozzle automatically according to the change of fabrics width, wasteless utilization of the hot air is achieved.
3. Adoption of the telescopic nozzle that has enabled approaching the fabrics and nozzle distance to approximately one third comparing existing types can improve the total heat transfer coefficient remarkably.
4. In addition to the above, high-level operation of circulating air by using the inverter, which can reduce electricity consumption significantly.

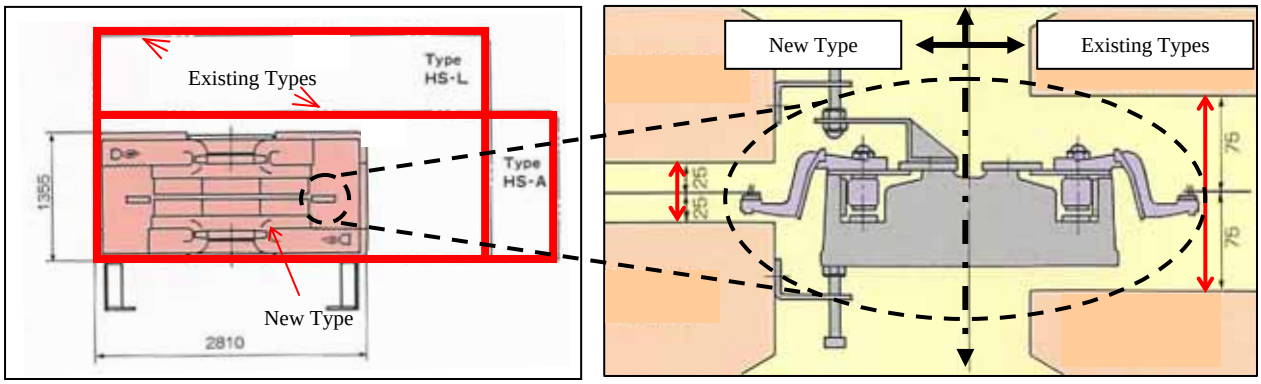


Remarkable compact-sized hot air circulating system

Telescopic nozzle that approaches the fabrics with a short distance

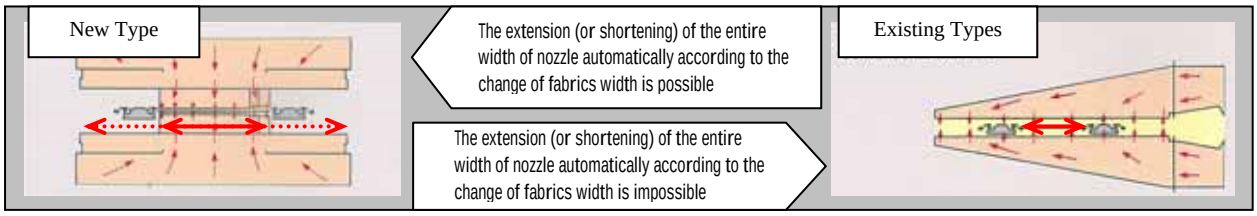


Extension (or shortening) of the entire width of nozzle automatically according to the change of fabrics width

**Figure-2 The technology to be adopted to the SSC-CPAs**

In each CPA, energy sources for tenters are both fossil fuel and electricity. Fossil fuel is used to heat oil in a boiler to supply tenters, which heats clothes/fabrics indirectly. Electricity is generated in the power stations connected to the Eastern China Power Grid.

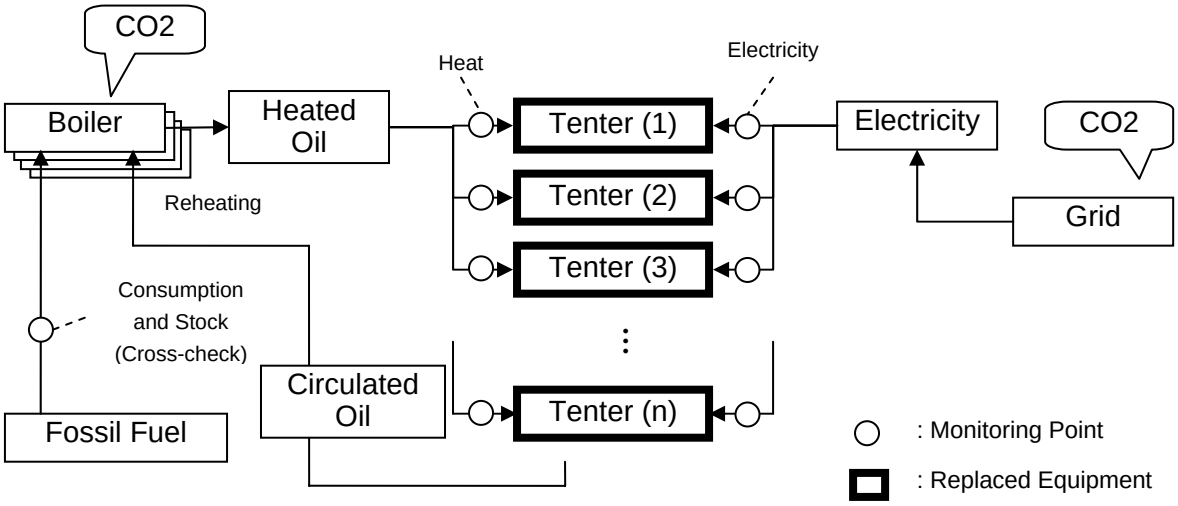


**Figure-3 Energy Flow in each CPA Boundary**

**A.4.2.2. Eligibility criteria for inclusion of a SSC-CPA in the PoA:**

>> Here only a description of criteria for enrolling the CPA shall be described, the criteria for demonstrating additionality of CPA shall be described in section E.5

A description of criteria for inclusion of a SSC-CPA has been described below.

1. Each CPA will involve introduction of the high-performance type of the tenter replacing all or part of the existing tenters in the dye works within the boundary of the PoA.
2. Each CPA will implement the Baseline and Monitoring Methodology AMS II.C/version 13 “Demand-side energy efficiency activities for specific technologies”.
3. Each CPA must be approved by the CME and DOE prior to its incorporation into the PoA.
4. Each CPA shall be uniquely identified by providing geographical information of the CPA.
5. The CME will ensure that all CPAs under its PoA are neither registered as an individual CDM project activity nor included in another registered PoA in the same geographical sites.
6. Each CPA must satisfy de-bundling rules for PoA.
7. Each CPA is to subscribe to the PoA.
8. The aggregate energy savings by a single CPA may not exceed the equivalent of 60 GWh per year for electricity and 180 GWh thermal per year in fuel input.
9. For each replaced tenter the rated capacity or output is not significantly smaller (maximum - 10%) than the baseline or significantly larger (maximum + 50%) than the baseline.

**A.4.3. Description of how the anthropogenic emissions of GHG by sources are reduced by a SSC-CPA below those that would have occurred in the absence of the registered PoA (assessment and demonstration of additionality):**

>> The following shall be demonstrated here:

(i) The proposed PoA is a voluntary coordinated action;
(ii) If the PoA is implementing a voluntary coordinated action, it would not be implemented in the absence of the PoA;
(iii) If the PoA is implementing a mandatory policy/regulation, this would/is not enforced;
(iv) If mandatory a policy/regulation is enforced, the PoA will lead to a greater level of enforcement of the existing mandatory policy/regulation.

The information presented here shall constitute the demonstration of additionality of the PoA as a whole.

**Voluntary Coordinated Action**

The proposed PoA is a voluntary coordinated action by the CME. In China, there are neither mandatory/regulatory requirements to reduce energy consumption targeted the dye works nor mandatory/regulatory requirements to replace the tenters in them, both at the central government level and at the Zhejiang government level.

In the absence of mandatory/regulatory requirements to reduce energy consumption, commercial incentives for each CPA exist only in cost reduction accompanied by reduction of energy consumption (fossil fuels and electricity) and by potential CER sales revenue.

**Previous Announcement Check / Consideration of CDM**

The proposed PoA was developed as a CDM activity. At no stage were public or private announcements made regarding the project proceeding without use of the CDM. The project is unable to attract any sources of revenue including the cost return by energy reduction, other than through the sale of CERs, and as such the PoA has always held CDM as central to its development.

**Tool to determine the remaining lifetime of equipment**

For each CPA, the adequate timing to replace the tenters is determined by using the latest version of "Tool to determine the remaining lifetime of equipment".

On the adoption of this tool, it is decided as follows, in "General guidelines to SSC CDM methodologies". [1]

"In case of replacement of existing equipment, project participants shall estimate the point in time where the existing equipment would be replaced in the absence of the project activity in accordance with the latest version of "Tool to determine the remaining lifetime of equipment".

For project activities that involve several equipments, project participants can either determine the remaining lifetime for each equipment or determine the remaining lifetime as the most conservative of the individual remaining lifetimes of the equipment by applying any one of the options (a) to (c).

[1] It was revised in EB54.

(a) Use manufacturer's information on the technical lifetime of equipment and compare to the date of first commissioning;
(b) Obtain an expert evaluation;
(c) Use default values.

Each CPA includes replacements of one tenter or more than one tenters, lifetimes of which may differ each other.

***Option (a): Use manufacturer's information for the technical lifetime of equipment and compare to the date of first commissioning***

In this option, the remaining lifetime is determined as a difference between the technical lifetime and the operational time.

This option can only be applied if:

(i) Manufacturer's information for the technical lifetime of the equipment is available;
(ii) The project participants can demonstrate that the equipment has been operated and maintained according to the recommendations of the equipment supplier to ensure that the technical lifetime specified by the manufacturer is not reduced; and
(iii) There are no periodic replacement schedules or scheduled replacement practices specific to the industrial facility, that require early replacement of equipment before the expiry of the technical lifetime;
(iv) The equipment has no design fault or defect and did not have any industrial accident due to which the equipment can not operate at rated performance levels.

On (i), there is no standardized technical lifetime of tenters and practical lifetime of every tenters differ significantly by their purpose or situation of use (e.g. operational time or maintenance), so this condition is not met.

On (ii), it depends on each CPA whether this condition is met or not.

On (iii), there are neither periodic replacement schedules nor scheduled replacement practices at the level of the PoA,[2] and at the level of CPAs it depends on each CPA whether there is any periodic replacement schedule.

On (iv), it depends on each CPA whether this condition is met or not.

As shown above, this option (a) cannot be applied because the condition (i) is not met at least.

***Option (b): Obtain an expert evaluation***

In this option, an independent expert having relevant experience in evaluating the remaining lifetime for the type of equipment can be requested to determine the remaining lifetime of the equipment. The information that could be evaluated includes an analysis of

(i) The operational history of the equipment to identify the past performance, equipment retrofits, failures/accidents, capacity upgrades/degradations, replacements etc.;

[2] Zhejiang Province Dyeing and Printing Association

(ii) The current operation and maintenance practices;
(iii) Documented specific sectoral/industry practices for replacements;
(iv) Conducting tests on the equipment, such as magnetic particle examinations, ultrasonic testing, metallurgical analysis, etc.

For the proposed PoA and each CPA, this option (b) can be applied by implementing the analysis including among (i), (ii), (iii), or (iv) adequately. However, on the analysis (ii), there are neither operation practices nor maintenance practices at the level of the PoA, and at the level of CPAs it depends on each CPA whether there is any periodic replacement schedule. [3]

***Option (c): Use default values***

In this option, project participants may use the following default values for the technical lifetime and determine the remaining lifetime as the difference of the technical lifetime and the operational time. This option can only be applied if:

(i) The project participants can demonstrate that the equipment has been operated and maintained according to the recommendations of the equipment supplier;
(ii) There are no periodic replacement schedules or scheduled replacement practices specific to the industrial facility, that require early replacement of equipment before the expiry of the technical lifetime; and
(iii) The equipment has no design fault or defect and did not have any industrial accident due to which the equipment can not operate at rated performance levels.

On (i), it depends on each CPA whether this condition is met or not.

On (ii), there are neither periodic replacement schedules nor scheduled replacement practices at the level of the PoA,[4] and at the level of CPAs it depends on each CPA whether there is any periodic replacement schedule.

On (iii), it depends on each CPA whether this condition is met or not.

Therefore, on every condition from (i) to (iii), it depends on each CPA whether these conditions are met or not. Although until now some default values are applied as shown in Table-1, the tenter has not been incorporated.

Project participant may propose a revision to this tool to include the default value of the technical lifetime for the tenter with justification and supporting documentation that demonstrate the appropriateness of the proposed value.

**Table-1 Default Values in Option (c)**

[3] Zhejiang Province Dyeing and Printing Association

[4] Zhejiang Province Dyeing and Printing Association

| Equipment | Default value for Technical lifetime |
|---|---|
| Boilers | 25 years |
| Steam Turbines | 25 years |
| Gas turbines, upto 50 MW capacity | 150,000 hours |
| Gas turbines, above 50 MW capacity | 200,000 hours |
| Hydro turbines | 150,000 hours |
| Electric Generators, air cooled | 25 years |
| Electric generators, hydrogen cooled or water cooled | 30 years |
| Wind turbines, onshore | 25 years |
| Wind turbines, offshore | 20 years |
| Diesel/oil/gas fired generator sets | 50,000 hours |
| Transformers | 30 years |
| Heaters, chillers, pumps, etc. used in HVAC systems | 15 years |

As shown above, for the PoA and each CPA, it is adequate to apply Option (b). On the concrete way to apply, it will be explained in each CPA-DD.

In each CPA under the PoA, baseline scenario will be combination of tenters, for each of which remaining lifetime is decided by using "Tool to determine the remaining lifetime of equipment".

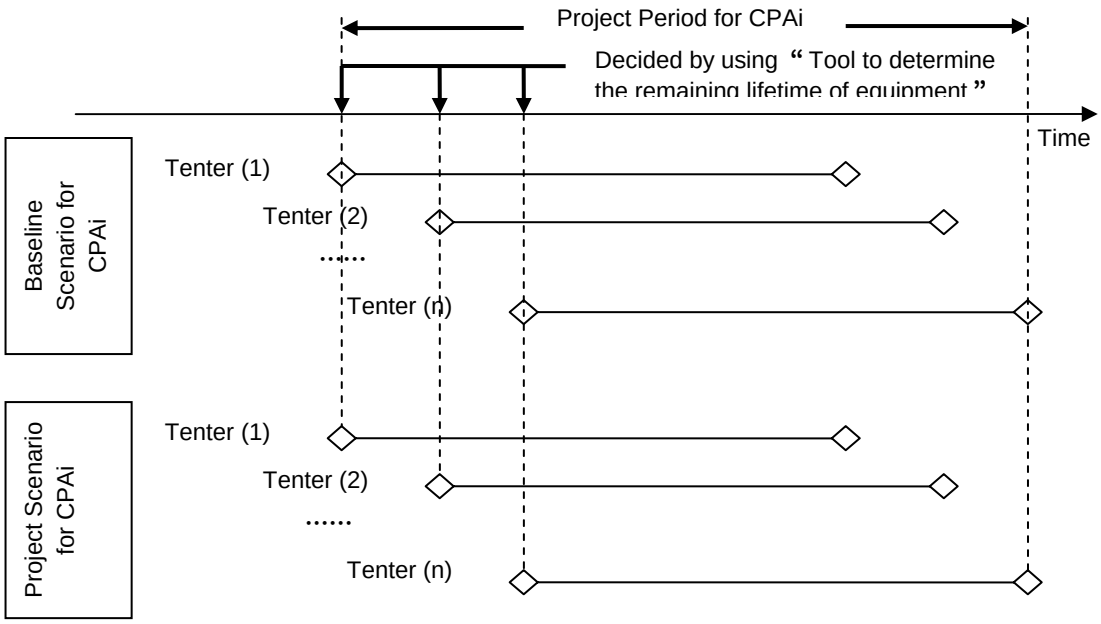


**Figure-4 Combination of Tenters in Baseline and Project Scenarios**

**Additionality Tool**

The latest version of "Tool for the demonstration and assessment of additionality" is used to demonstrate that the project activity is not implemented without the PoA.

***Step 1: Identification of alternatives to the project activity consistent with current laws and regulations***

For each CPA, alternatives to the project activity will be identified in accordance with the latest version of the methodology AMS-II.C. "Demand-side energy efficiency activities for specific technologies".

***Sub-step 1a: Define alternatives to the project activity:***

For each CPA, alternatives to the project activity will be defined along with the following way:

(i) Prior to the replacement(s) of tenter(s) that is (are) incorporated in the plan of the CPA, the managing entity of the dye industry in Zhejiang Province (Zhejiang Province Dyeing and Printing Association) will make out the list of the tenters' manufacturers and types that are probable to be introduced in the project period, taking into consideration of the introduction history and market of the tenters.

(ii) For the CPA site, the manufacturer(s) and type(s) that was (were) introduced in the latest year will be collated with that (those) listed in (i) above. The matched manufacturer(s) and type(s) is (are) regarded as the alternative(s) to the project activity.

(iii) If there are alternatives more than one as the result of (ii) above, all of alternatives are regarded as the alternatives to the project activity.

(iv) If there is no alternative as the result of (ii) above, all of alternative(s) listed in (i) above is (are) regarded as the alternative(s) to the project activity.

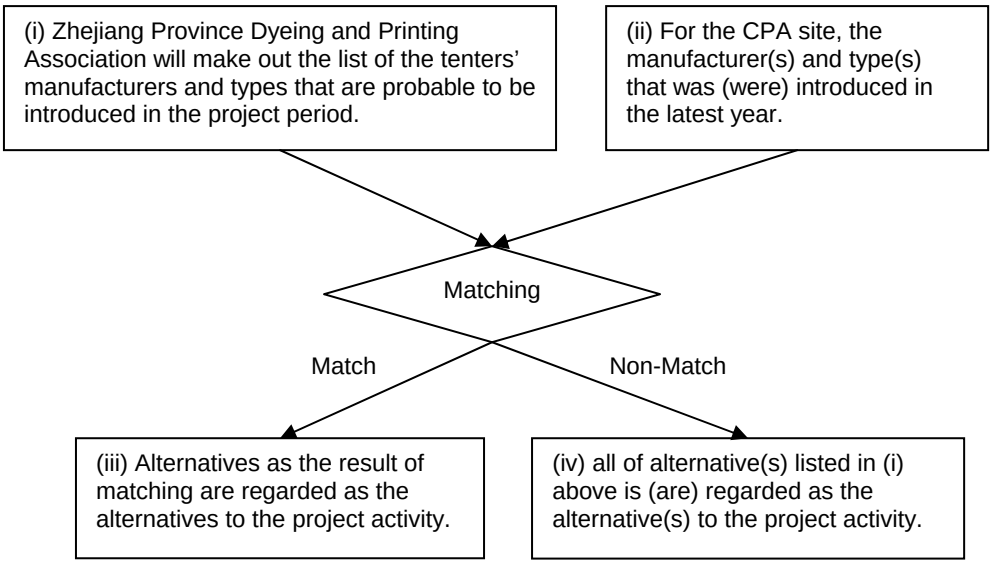


**Figure-5 Alternatives to the Project Activity for each CPA**

Therefore two scenarios of alternatives to the proposed PoA have been identified.

B1: Proposed project activity (that is not undertaken as the CDM project activity)

B2: Introduction of the tenter(s) that is (are) identified in the way of (i) – (iv) above

***Sub-step 1b: Consistency with mandatory laws and regulations:***

The proposed PoA is a voluntary coordinated action by the CME, as shown above. In China, there are neither mandatory/regulatory requirements to reduce energy consumption targeted the dye works nor mandatory/regulatory requirements to replace the tenters in them, both at the central government level and at the Zhejiang government level.

Hence in each CPA-DD, after identifying the scenario B2, the following Step 2 (Investment analysis) will be implemented for baseline scenario B1 and B2, together with for project scenario.

***Step 2: Investment analysis***

***Sub-step 2a: Determine appropriate analysis method***

In all of CPAs, project activity (replacement and operation of tenters) is one of the indispensable production processes in dyne works, and generates economic benefit that is linked to dyne products. So for any CPAs the simple cost analysis (Option I) cannot be applied.

Furthermore, project activity (replacement and operation of tenters) cannot be outsourced, and each CPA never judge about whether an investment is valid or not, only by its profit.

Practically company management will select one activity among alternatives (baseline scenario B1 and B2 or project scenario) for the indispensable production processes done by tenters.

In “Annex: Guidance on the Assessment of Investment Analysis” Ver.02 of “Tool for the demonstration and assessment of Additionality” Ver.05.2, adequate way of deciding the option between “Option II. Apply investment comparison analysis” and “Option III. Apply benchmark analysis”. [5]

“The purpose of an investment analysis in the context of the CDM is to determine whether the project is less financially attractive than at least one alternative in which the project participants could have invested. In cases where the alternative requires investment anyhow and baseline emissions are based on that alternative, the only means of determining that the project activity is less financially attractive than at least one alternative is to conduct an investment comparison analysis. The benchmark approach is therefore suited to circumstances where the baseline does not require investment or is outside the direct control of the project developer, i.e. cases where the choice of the developer is to invest or not to invest.”

In the process of decision-making in each CPA, the difference between the project activity and its alternatives is regarded as the additional investment, and in this case the baseline does not require investment.

Therefore, it is appropriate to apply the benchmark analysis (Option III) for each CPA.

***Sub-step 2b: Option III. Apply benchmark analysis***

[5] http://cdm.unfccc.int/methodologies/PAmethodologies/tools/am-tool-01-v5.2.pdf

Benchmark analysis will be undertaken in each CPA-DD.

***Step 4: Common practice analysis***
***Sub-step 4a: Analyze other activities similar to the proposed project activity:***

Types of tenters that are listed up in Sub-step 1a (i) can be regarded as the most financially attractive and plausible in the boundary of the PoA. Furthermore, the type(s) of tenter(s) identified after Sub-step 1a (ii) for each CPA should be regarded as the alternative(s) of the baseline scenario.

Whereas if there is a case that any type of tenter which is not included in the list made out in Sub-step 1a (i) has been introduced in a dyne works inside the geographical boundary of the PoA, that activity will be regarded as one of the "other activities similar to the proposed project activity".

***Sub-step 4b: Discuss any similar Options that are occurring:***

There is not any common practice of other activities similar to the proposed activity, CPAs under the PoA, and there are no regulations/laws to promote to implement the PoA. In each CPA-DD, it is necessary to demonstrate on those two points.

**Energy Efficiency**
There are no mandatory/regulatory requirements on energy efficiency to promote other activities similar to the proposed activity, CPAs under the PoA.

**Initial Investment**
If initial investment cost of other activities similar to the proposed activity is higher than those listed in Sub-step 1a (i), it should be demonstrated that (a) the former is for the tenter to make special products, or (b) the former is decided based on some conditions different from now.

## A.4.4. Operational, management and monitoring plan for the programme of activities (PoA):

### A.4.4.1. Operational and management plan:

>> Description of the operational and management arrangements established by the coordinating/managing entity for the implementation of the PoA, including:

**(i) A record keeping system for each CPA under the PoA**

Each CPA follows monitoring methodology and data saving method as provided AMS-II.C. "Demand-side energy efficiency activities for specific technologies" version 13. The CME confirms that each CPA manages appropriate data including the following items.

- Geographical location of each CPA
- Detailed information of the replaced tenters
- Detailed information of the introduced tenters
- Technical information on energy consumption of the tenter(s) identified as the alternative(s) under the baseline scenario
- Monitoring data on energy consumption of the tenter(s) introduced

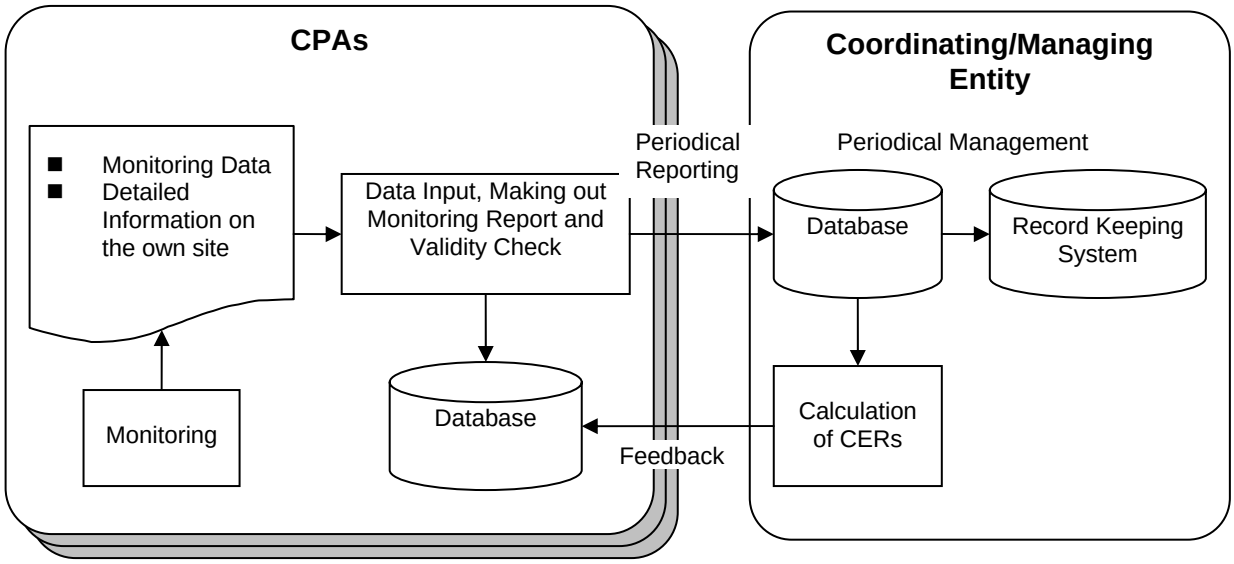


**Figure-6 Data collection and record keeping procedure**

**(ii) A system/procedure to avoid double accounting e.g. to avoid the case of including a new CPA that has been already registered either as a CDM project activity or as a CPA of another PoA**

Prior to registration of a new CPA to this proposed PoA, the CME checks CDM database to make sure that the new CPA has not been registered as a CDM project or in other PoAs. This search process covers project activities and PoAs that are registered, application for registration, under review or correction request. The same checking is also implemented by the DoE that conducts scrutiny for addition of CPA to the PoA.

In case the CME concludes that there already exists a similar CDM project activity or a CPA of another PoA (in the CDM cycle) in the geographical boundary of this proposed PoA, then it will not proceed with the registration of the particular CPA under the PoA. Thus the CME shall avoid double accounting of CDM revenues.

**(iii) The SSC-CPA included in the PoA is not a de-bundled component of another CDM programme activity (CPA) or CDM project activity**

The CME will follow "Guidance for determining the occurrence of de-bundling under a Programme of Activity" to ensure that the proposed CPA is not a de-bundled component of a large scale activity.

**(iv) The provisions to ensure that those operating the CPA are aware of and have agreed that their activity is being subscribed to the PoA**

The CME will obtain an authorization letter from each of the CPA implementers intending to participate under the PoA to act collectively for the purpose of the PoA.

**Table-2 Work Sharing and Management Responsibilities**

| Entity | Work Sharing and Management Responsibilities |
|---|---|
| The Coordinating/Managing Entity (CME)<br>Greenensign (Beijing) New Energy Technology Ltd. | **< Contact and Information >**<br>- Contact and information sharing between the CME and CPA sites.<br>- Contact and information sharing with China's DNA (NDRC).<br>**< Validation, Monitoring and Verification >**<br>- Responses to a validation process as the PoA and CPA.<br>- Periodic collection of monitoring data.<br>- Preparation of monitoring reports for emission reductions.<br>- Responses to a verification process as the CPA.<br>**< Data Management >**<br>- Backup of monitoring data and related evidences.<br>- Record keeping for two years after credit issuance.<br>**< Carbon Credits >**<br>- Emissions Reduction Purchasing Agreement (ERPA) with credit buyers.<br>- Sharing CERs revenue with CPAs.<br>- Payment of 2% of CERs revenue to the Chinese Government. |
| Each CPA | **< Validation, Monitoring and Verification >**<br>- Responses to a validation process as the CPA.<br>- Implementation of monitoring.<br>- Reporting of monitoring data and related evidences to the CME.<br>- Responses to a verification process as the CPA.<br>**< Data Management >**<br>- Backup of monitoring data and related evidences.<br>- Record keeping for two years after credit issuance.<br>**< Carbon Credits >**<br>- Agreement with the CME for taking carbon credits. |

**A.4.4.2. Monitoring plan:**

>> The following information shall be provided here:

(i) Description of the proposed statistically sound sampling method/procedure to be used by DOEs for verification of the amount of reductions of anthropogenic emissions by sources or removals by sinks of greenhouse gases achieved by CPAs under the PoA.

(ii) In case the coordinating/managing entity opts for a verification method that does not use sampling but verifies each CPA (whether in groups or not, with different or identical verification periods) a transparent system is to be defined and described that ensures that no double accounting occurs and that the status of verification can be determined anytime for each CPA;

The coordinating/managing entity chooses (ii) and adopts a method in which DOE verifies each CPA.

Each CPA implements monitoring in accordance with AMS II.C. "Demand-side energy efficiency activities for specific technologies" version 13, and regularly reports the data to the coordinating/managing entity after cross-checking on data validation. The unit duration for monitoring should be the same across all CPAs.

The coordinating/managing entity prepares monitoring report that integrates all CPA included in PoA, for allowing DOE to implement verification on each CPA. In the monitoring report, primary monitoring data and calculation on CERs are described in a transparent manner for each CPA included PoA. Data-set relevant to each CPA is completely exclusive to other data-set included in the same PoA, and because of this, double-counting is avoided.

The monitoring data collected and organized in each CPA are reported to project database which is managed by the coordinating/managing entity for calculation of CERs from each CPA and PoA as a whole. Primary monitoring data is managed so as to allow attribution to each CPA.

Primary monitoring data are saved in each CPA and coordinating/managing entity for a certain period of time. With regard to calculation results, the coordinating/managing entity will save them for a certain period of time: especially for CER, feedback will be made after monitoring report to each CPA from which the data was provided.

**A.4.5. Public funding of the programme of activities (PoA):**

>>
No public funding or ODA is used to implement this CDM Programme of Activity (PoA).

## SECTION B. Duration of the programme of activities (PoA)

**B.1. Starting date of the programme of activities (PoA):**

>>
XXXX 2011

In line with guidance provide in EB41, this start date has been chosen as it is estimated that at this time registration by the CDM Executive Board will be completed. It is only after registration that implementation of CPAs will occur constituting “real action” as defined by the Executive Board guidance. Hence the date of registration is considered as appropriate start date for the PoA.

**B.2. Length of the programme of activities (PoA):**

>>
28 years.

## SECTION C. Environmental Analysis

>>

**C.1. Please indicate the level at which environmental analysis as per requirements of the CDM modalities and procedures is undertaken. Justify the choice of level at which the environmental analysis is undertaken:**

1. Environmental Analysis is done at PoA level ☐
2. Environmental Analysis is done at SSC-CPA level X

According to the EIA management category list for construction projects, the environmental impact assessment for investments in China is done under three different management methods:

a. EIA registration form: business operators apply directly to the environmental protection section. The approval takes 15 days and there is no need to hire an environmental assessment company.
b. EIA report form: for medium- to small-scale projects with a certain degree of environmental impact but no pollution. Business operators must hire an environmental assessment company to prepare a report. The approval takes 30 days.
c. EIA report: for projects that cause environmental pollution and impact. Business operators must hire an environmental assessment company to prepare a report. The approval takes 60 days.

Since each CPA project does not cause environmental pollution or impact due to the replacement of the equipment, method a. above will be applied.

**C.2. Documentation on the analysis of the environmental impacts, including transboundary impacts:**

>>

**C.3. Please state whether in accordance with the host Party laws/regulations, an environmental impact assessment is required for a typical CPA, included in the programme of activities (PoA),:**

>>
As mentioned above, relevant environmental standards will be satisfied in typical CPA.

**SECTION D. Stakeholders' comments**

>>

**D.1. Please indicate the level at which local stakeholder comments are invited. Justify the choice:**

1. Local stakeholder consultation is done at PoA level X
2. Local stakeholder consultation is done at SSC-CPA level ☐

Note: If local stakeholder comments are invited at the PoA level, include information on how comments by local stakeholders were invited, a summary of the comments received and how due account was taken of any comments received, as applicable.

**D.2. Brief description how comments by local stakeholders have been invited and compiled:**

>>
In order to collect comments at PoA level, the following sessions were held:

- Visited Development and Reform Commission (DRC) of Zhejiang District and held a meeting to exchange views on this PoA. (September 16th, 2010)
- Visited Zhejiang Province Dyeing and Printing Association, the managing entity of the dye industry in Zhejiang Province that has candidates for CPAs as the members, and held a meeting to exchange views on this PoA. (September 16th and November 15th, 2010)
- Visited Greenensign (Beijing) New Energy Technology Ltd. (CME) and held a meeting to exchange views on this PoA. (September 17h, 2010)

- Greenensign (Beijing) New Energy & Utility Technology Ltd (CME) described about the project at the 4th Zhejiang Dyeing and Printing Association 3rd council meeting hosted by the Zhejiang Dyeing and Printing Association and at the China Dyeing And Printing Association's 2010 national dye and printing industry annual meeting for energy conservation and environmental protection organized by the China Dyeing And Printing Association. (November, 2010)
- Visited Tsinghua University and held a meeting to exchange views on this PoA. (January 25th, 2011)

**D.3. Summary of the comments received:**

>>

**View-exchange meeting in DRC of Zhejiang District (September 16th, 2010)**

- DRC considers that there are not so many successful programme CDM and that monitoring is difficult as problems.
- DRC will investigate appropriateness as candidate of CPA for the projects that has emission reductions more than 10 thousand t-CO2/y, and recommends to implement as general CDMs for the projects that has emission reductions more than 30 thousand t-CO2/y in principle.
- On this proposed PoA, DRC recommends to include 5 or 6 tenters, each of which has reduction potential of 2 – 3 thousand t-CO2/y, as the CPA model.

**View-exchange meeting in Zhejiang Province Dyeing and Printing Association (September 16th and November 15th, 2010)**

- Zhejiang Province Dyeing and Printing Association considers that this proposed PoA has good quality and that it is necessary to share it among dyne works in Zhejiang District. The 1st CPA will be regarded as a model of the programme CDM.
- It is important that a demonstration of Japanese technology is implemented to make it well-known.
- In general, companies in Zhejiang District have reliable economical basis, so it will be appropriate to develop CDM projects.
- Zhejiang Province Dyeing and Printing Association recommends to select CPA sites among large dyne works.
- In Zhejiang District there are 1,300 tenters operating, and there is large potential of CO2 reduction.

**View-exchange meeting in Greenensign (Beijing) New Energy Technology Ltd. (September 17th, 2010)**

- Greenensign (Beijing) New Energy Technology Ltd. understands and agrees the works/roles necessary as the CME.

**View-exchange meeting in Tsinghua University (January 25th, 2011)**

- The experts at CDM executive board of China confirmed the baseline scenario and regarded it as adequate.
- The NDRC (Chinese DNA) will investigate P-CDMs in the same procedures and levels with the regular CDM projects for approval.

**D.4. Report on how due account was taken of any comments received:**

>>

N.A.

## SECTION E. Application of a baseline and monitoring methodology

This section shall demonstrate the application of the baseline and monitoring methodology to a typical SSC-CPA. The information defines the PoA specific elements that shall be included in preparing the PoA specific form used to define and include a SSC-CPA in this PoA (PoA specific CDM-SSC-CPA-DD).

### E.1. Title and reference of the approved SSC baseline and monitoring methodology applied to a SSC-CPA included in the PoA:

>>
Baseline and Monitoring methodology:
Approved small-scale methodology AMS II.C. "Demand-side energy efficiency activities for specific technologies" version 13

In the PoA-DD and each CPA-DD, the following tools of the latest version are used:
- Tool to calculate the emission factor for an electricity system
- Tool for the demonstration and assessment of additionality
- Tool to determine the remaining lifetime of equipment

### E.2. Justification of the choice of the methodology and why it is applicable to a SSC-CPA:

>>
NOTE: In the case of CPAs which individually do not exceed the SSC threshold, SSC methodologies may be used once they have first been reviewed and, as needed, revised to account for leakage in the context of a SSC-CPA.

| Sr. No. | Requirement for applicability of the methodology | Whether the SSC-CPA complies with the given requirement |
|---|---|---|
| 1. | The project is to encourage the adoption of energy-efficient equipment/appliance (e.g., lamps, ballasts, refrigerators, motors, fans, air conditioners, pumping systems) at many sites. These technologies may replace existing equipment or be installed at new sites. | The CPAs to be implemented under this PoA involve energy efficiency measures in relation to replace tenters at various sites, resulting in demand-side energy (fossil fuel and electricity) savings and associated avoidance of GHG emissions. |
| 2. | The aggregate energy savings by a single project may not exceed the equivalent of 60 GWh per year for electrical end use energy efficiency technologies.<br>For fossil fuel end use energy efficient technologies, the limit is 180 GWh thermal per year in fuel input. | The managing entity will admit only those CPAs under this PoA that individually will result in not more than 60 GWh for electrical end use and 180 GWh thermal for fossil fuel end use. |
| 3. | For each replaced appliance/equipment/system the rated capacity or output or level of service (e.g., light output, water output, room temperature and comfort, the rated output capacity of air-conditioners etc.) is not significantly smaller (maximum - 10%) than the baseline or | The managing entity will use the requirements of this clause for evaluating any CPA to be added under this PoA.<br>Even though in cases where a CPA results in increase in tenters' output/capacity, the baseline emissions will be calculated based on the tenters under the identified baseline scenario. To be |

| | | |
|---|---|---|
| | significantly larger (maximum + 50%)1 than the baseline. | conservative, the baseline emissions will not be accounted in relation to the tenters' increased output/capacity. |
| 4. | If the energy efficient equipment contains refrigerants, then the refrigerant used in the project case shall be CFC free. | The managing entity will ensure that each CPA under this PoA complies with this methodological requirement. |

**E.3. Description of the sources and gases included in the SSC-CPA boundary**

>>

| | Source | Gas | Included? | Justification |
|---|---|---|---|---|
| Baseline Emissions | Fossil fuel consumption in boilers that supply heated oil for tenters | CO2 | **Yes** | The main emissions |
| | | CH4 | No | Excluded for simplification, it's conservative |
| | | N2O | No | Excluded for simplification, it's conservative |
| | Electricity generation from the grid | CO2 | **Yes** | The main emissions |
| | | CH4 | No | Excluded for simplification, it's conservative |
| | | N2O | No | Excluded for simplification, it's conservative |
| Project Emissions | Fossil fuel consumption in boilers that supply heated oil for tenters | CO2 | **Yes** | The main emissions |
| | | CH4 | No | Excluded for simplification, it's conservative |
| | | N2O | No | Excluded for simplification, it's conservative |
| | Electricity generation from the grid | CO2 | **Yes** | The main emissions |
| | | CH4 | No | Excluded for simplification, it's conservative |
| | | N2O | No | Excluded for simplification, it's conservative |

**E.4. Description of how the baseline scenario is identified and description of the identified baseline scenario:**

>>

The baseline scenario of each CPA is introductions and operations of tenters that would be replaced in the absence of the project activity.

In each CPA-DD, the adequate timing to replace the tenters is determined by using the latest version of "Tool to determine the remaining lifetime of equipment". For the PoA and each CPA, it is adequate to apply Option (b) of the tool. On the concrete way to apply, it will be explained in each CPA-DD. (see **A.4.3**)

For each CPA, tenters that would be replaced in the absence of the project activity will be defined along with the following way:

(i) Prior to the replacement(s) of tenter(s) that is (are) incorporated in the plan of the CPA, the managing entity of the dye industry in Zhejiang Province (Zhejiang Province Dyeing and Printing Association) will make out the list of the tenters' manufacturers and types that are probable to be introduced in the project period, taking into consideration of the introduction history and market of the tenters.

(ii) For the CPA site, the manufacturer(s) and type(s) that was (were) introduced in the latest year will be collated with that (those) listed in (i) above. The matched manufacturer(s) and type(s) is (are) regarded as the alternative(s) to the project activity.
(iii) If there are alternatives more than one as the result of (ii) above, all of alternatives are regarded as the alternatives to the project activity.
(iv) If there is no alternative as the result of (ii) above, all of alternative(s) listed in (i) above is (are) regarded as the alternative(s) to the project activity.

By following above, baseline scenario(s) will be identified.

**E.5. Description of how the anthropogenic emissions of GHG by sources are reduced below those that would have occurred in the absence of the SSC-CPA being included as registered PoA (assessment and demonstration of additionality of SSC-CPA): >>**

**E.5.1. Assessment and demonstration of additionality for a typical SSC-CPA:**

>> Here the PPs shall demonstrate, using the procedure provided in the baseline and monitoring methodology applied, additionality of a typical CPA.

For each CPA, possible scenarios for the introduction of tenters are two types as follows:

B1: Proposed project activity (that is not undertaken as the CDM project activity)
B2: Introduction of the tenter(s) that is (are) identified in accordance with the way of E.4.

Additionality for a typical CPA is demonstrated by using the latest version of “Tool for the demonstration and assessment of additionality”.

***Sub-step 1b: Consistency with mandatory laws and regulations:***

The proposed PoA is a voluntary coordinated action by the CME, as shown above. In China, there are neither mandatory/regulatory requirements to reduce energy consumption targeted the dye works nor mandatory/regulatory requirements to replace the tenters in them, both at the central government level and at the Zhejiang government level.

Hence in each CPA-DD, after identifying the scenario B2, the following Step 2 (Investment analysis) will be implemented for baseline scenario B1 and B2, together with for project scenario.

***Step 2: Investment analysis***

***Sub-step 2a: Determine appropriate analysis method***

In all of CPAs, project activity (replacement and operation of tenters) is one of the indispensable production processes in dyne works, and generates economic benefit that is linked to dyne products. So for any CPAs the simple cost analysis (Option I) cannot be applied.

Furthermore, project activity (replacement and operation of tenters) cannot be outsourced, and each CPA never judge about whether an investment is valid or not, only by its profit.

Practically company management will select one activity among alternatives (baseline scenario B1 and B2 or project scenario) for the indispensable production processes done by tenters, so it is appropriate to apply the benchmark analysis (Option III) for each CPA, regarding the difference between the project activity and its alternatives as the additional investment.

***Sub-step 2b: Option III. Apply benchmark analysis***

Benchmark analysis will be undertaken in each CPA-DD.

***Step 4: Common practice analysis***
***Sub-step 4a: Analyze other activities similar to the proposed project activity:***

Types of tenters that are listed up in Sub-step 1a (i) can be regarded as the most financially attractive and plausible in the boundary of the PoA. Furthermore, the type(s) of tenter(s) identified after Sub-step 1a (ii) for each CPA should be regarded as the alternative(s) of the baseline scenario.

Whereas if there is a case that any type of tenter which is not included in the list made out in Sub-step 1a (i) has been introduced in a dyne works inside the geographical boundary of the PoA, that activity will be regarded as one of the "other activities similar to the proposed project activity".

***Sub-step 4b: Discuss any similar Options that are occurring:***

There is not any common practice of other activities similar to the proposed activity, CPAs under the PoA, and there are no regulations/laws to promote to implement the PoA. In each CPA-DD, it is necessary to demonstrate on those two points.

**Energy Efficiency**
There are no mandatory/regulatory requirements on energy efficiency to promote other activities similar to the proposed activity, CPAs under the PoA.
Also,the CPAs under the PoA haven't introduce tenters similar to the proposed activity.

**Initial Investment**
If initial investment cost of other activities similar to the proposed activity is higher than those listed in Sub-step 1a (i), it should be demonstrated that (a) the former is for the tenter to make special products, or (b) the former is decided based on some conditions different from now.

**E.5.2. Key criteria and data for assessing additionality of a SSC-CPA:**

>> Here the PPs shall provide the key criteria for assessing additionality of a CPA when proposed to be included in the registered PoA. The criteria shall be based on additionality assessment undertaken in E.5.1 above. The project participants shall justify the choice of criteria based on analysis in above section. It shall be demonstrated how these criteria would be applied to assess the additionality of a typical CPA at the time of inclusion.

NOTE: Information provided here shall be incorporated into the PoA specific CDM-SSC-CPA-DD that shall be included in documentation submitted by project participants at registration of PoA.

**E.6. Estimation of Emission reductions of a CPA:**

**E.6.1. Explanation of methodological choices, provided in the approved baseline and monitoring methodology applied, selected for a typical SSC-CPA:**

>>
In each CPA, AMS II.C. (version 13) is applied.

**E.6.2. Equations, including fixed parametric values, to be used for calculation of emission reductions of a SSC-CPA:**

>>
As shown below, emission factor and emission reductions are calculated.

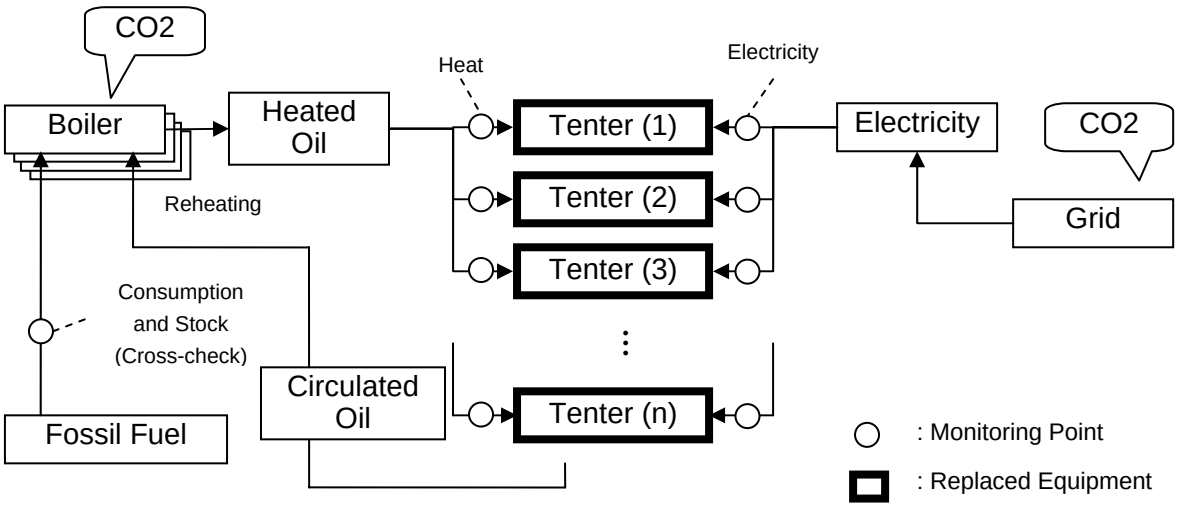


**Figure-7 Energy Flow in each CPA Boundary**

**(A) <u>Calculation of Baseline Emissions</u>**

Types of energy to be reduced are both fossil fuel and electricity, so emissions caused by energy consumption are calculated for fossil fuel and electricity separately, and summed up.

$BE_y = BEF_y + BEE_y$
where,
$BE_y$ Baseline emissions in year y (tCO2e)
$BEF_y$ Baseline emissions from fuel consumption in year y (tCO2e)
$BEF_y$ Baseline emissions from electricity consumption in year y (tCO2e)

**<u>Fossil Fuel</u>**

In case that energy to be reduced is fossil fuel, the energy baseline is determined using one of the two following options:

(a) Existing level of fuel consumption;
(b) Amount of fuel that would be used by the technology that would have been implemented otherwise.

In each CPA-DD, baseline emissions from fossil fuel consumption are calculated as follows:

$BEF_y = EF_{BL,y} * EF_{CO2,F,y}$

where,

| | |
|---|---|
| $BEF_y$ | Baseline emissions from fuel consumption in year y (tCO2e) |
| $EF_{BL,y}$ | Fuel consumption in the baseline in year y (t) |
| $EF_{CO2,F,y}$ | Emission factor of the fuel in year y (tCO2/t-fuel) |

**Electricity**

In each CPA-DD, baseline emissions from electricity consumption are calculated as follows:

$BEE_y = EE_{BL,y} * EF_{CO2,F,y} + Q_{ref,BL} * GWP_{ref,BL}$

where,

| | |
|---|---|
| $BEF_y$ | Baseline emissions from electricity consumption in year y (tCO2e) |
| $EF_{BL,y}$ | Electricity consumption in the baseline in year y (kWh) |
| $EF_{CO2,ELEC,y}$ | Emission factor of the fuel in year y calculated in accordance with the provisions in AMS-I.D (tCO2/MWh) |
| $Q_{ref,BL}$ | Average annual quantity of refrigerant used in the baseline to replace the refrigerant that has leaked, which is zero in any CPAs. |
| $GW_{Pref,BL}$ | Global Warming Potential of the baseline refrigerant (t CO2e/t refrigerant) |

**(B) Calculation of Project Emissions**

Project emissions caused by energy consumption are calculated for fossil fuel and electricity separately, and summed up, in the same way as baseline emissions.

$PE_y = PEF_y + PEE_y$

where,

| | |
|---|---|
| $PE_y$ | Project emissions in year y (tCO2e) |
| $PEF_y$ | Project emissions from fuel consumption in year y (tCO2e) |
| $PEE_y$ | Project emissions from electricity consumption in year y (tCO2e) |

**Fossil Fuel**

In each CPA-DD, project emissions from fossil fuel consumption are calculated as follows:

$PEF_y = EF_{PJ,y} * EF_{CO2\ FUEL,y}$

where,

| | |
|---|---|
| $PEF_y$ | Project emissions from fuel consumption in year y (tCO2e) |
| $EF_{PJ,y}$ | Fuel consumption in project activity in year y. This shall be determined ex post based on monitored values (t) |
| $EF_{CO2,FUEL,y}$ | Emission factor of the fuel in year y (tCO2/t-fuel) |

**Electricity**

In each CPA-DD, project emissions from electricity consumption are calculated as follows:

$PEE_y = EE_{PJ,y} * EF_{CO2\ ELEC,y}$
where,

| | |
|---|---|
| $PEE_y$ | Project emissions from electricity consumption in year y (tCO2e) |
| $EE_{PJ,y}$ | Electricity consumption in project activity in year y. This shall be determined ex post based on monitored values (kWh) |
| $EF_{CO2,ELEC,y}$ | Emission factor of the fuel in year y calculated in accordance with the provisions in AMS-I.D (tCO2/MWh) |

**(C) <u>Leakage</u>**

In the methodology AMS II.C. (version 13), it is decided as follows:

- "If the energy efficiency technology is equipment from another activity, leakage is to be considered.";
- "In case the project activity involves the replacement of equipment, and the leakage effect of the use of the replaced equipment in another activity is neglected, because the replaced equipment is scrapped, an independent monitoring of scrapping of replaced equipment needs to be implemented."

On the former, for each CPA, it is necessary to check that introduced tenters are not those from another activity.

On the latter, for each CPA, it is necessary to implement an independent monitoring of scrapping of replaced tenters. In the Zhejiang Province, the geographical boundary of the PoA, scrapping of tenters leads to recycling of resources, in principle. Followings need to be implemented in accordance with AMS II.C. (version 13):

- The monitoring should include a check if the number of project activity equipment distributed by the project and the number of scrapped tenters correspond with each other. For this purpose scrapped tenters should be stored until such correspondence has been checked.
- The scrapping of replaced tenters should be documented and independently verified.

$LE_y = 0$
where,

| | |
|---|---|
| $LE_y$ | Leakage emissions in year y (tCO2e) |

**(D) <u>Calculation of Emission Reductions</u>**

The emission reduction achieved by the project activity shall be determined as the difference between the baseline emissions and the project emissions and leakage.

$ER_y = (BE_y - PE_y) - LE_y$
where,

| | |
|---|---|
| $ER_y$ | Emission reductions in year y (tCO2e) |
| $BE_y$ | Baseline emissions in year y (tCO2e) |
| $PE_y$ | Project emissions in year y (tCO2e) |

$LE_y$ Leakage emissions in year y (tCO2e)

**E.6.3. Data and parameters that are to be reported in CDM-SSC-CPA-DD form:**

**1. Data parameters for calculating baseline emissions**

| **Data / Parameter:** | $EF_{BL,y}$ |
|---|---|
| Data unit: | tonne |
| Description: | Fuel consumption in the baseline in year y |
| Source of data used: | Energy baseline in case of fuel consumption is determined based on the analysis data or technical data for tenter type of the alternative to the project activity. |
| Value applied: | To be determined with respect to each CPA. |
| Justification of the choice of data or description of measurement methods and procedures actually applied : | The analysis data or technical data are always energy-efficient compared with those in the practical operation; hence the choice of data is regarded as conservative. |
| Any comment: | |

| **Data / Parameter:** | $EF_{CO2,F,y}$ |
|---|---|
| Data unit: | tCO2/t-fuel |
| Description: | Emission factor of the fuel in year y |
| Source of data used: | Value for bituminous coal |
| Value applied: | IPCC Values |
| Justification of the choice of data or description of measurement methods and procedures actually applied : | |
| Any comment: | |

| **Data / Parameter:** | $EF_{BL,y}$ |
|---|---|
| Data unit: | kWh |
| Description: | Electricity consumption in the baseline in year y |
| Source of data used: | Energy baseline in case of electricity consumption is determined based on the analysis data or technical data for tenter type of the alternative to the project activity. |
| Value applied: | To be determined with respect to each CPA. |
| Justification of the choice of data or description of measurement methods and procedures actually applied : | The analysis data or technical data are always energy-efficient compared with those in the practical operation; hence the choice of data is regarded as conservative. |
| Any comment: | |

| **Data / Parameter:** | $EF_{CO2,ELEC,y}$ |
|---|---|
| Data unit: | tCO2/MWh |
| Description: | Emission factor of the fuel in year y calculated in accordance with the provisions in AMS-I.D |
| Source of data used: | CM (Combined Margin) of the Eastern China Power Grid that is announced by National Development and Reform Commission (NDRC), PR China |
| Value applied: | 0.7826 |
| Justification of the choice of data or description of measurement methods and procedures actually applied : | |
| Any comment: | It is updated according to China DNA. |

| **Data / Parameter:** | $Q_{ref,BL}$ |
|---|---|
| Data unit: | tonnes/year |
| Description: | Average annual quantity of refrigerant used in the baseline to replace the refrigerant that has leaked |
| Source of data used: | |
| Value applied: | zero |
| Justification of the choice of data or description of measurement methods and procedures actually applied : | The CME will ensure that no refrigerant is used each CPA under this PoA. |
| Any comment: | |

| **Data / Parameter:** | $HG^{B}_{j,y}$ |
|---|---|
| Data unit: | TJ/y |
| Description: | Heat supplied by boilers by using fossil fuels in baseline activity in year y |
| Source of data used: | Keep monitoring |
| Value applied: | |
| Justification of the choice of data or description of measurement methods and procedures actually applied : | |
| Any comment: | |

**2. Data parameters for calculating project emissions**

| **Data / Parameter:** | $EF_{PJ,y}$ |
|---|---|
| Data unit: | tonne |
| Description: | Fuel consumption in project activity in year y. This shall be determined ex post |

| | |
|---|---|
| | based on monitored values |
| Source of data used: | Keep monitoring |
| Value applied: | |
| Justification of the choice of data or description of measurement methods and procedures actually applied : | |
| Any comment: | |

| **Data / Parameter:** | $EE_{PJ,y}$ |
|---|---|
| Data unit: | kWh |
| Description: | Electricity consumption in project activity in year y. This shall be determined ex post based on monitored values |
| Source of data used: | Keep monitoring |
| Value applied: | |
| Justification of the choice of data or description of measurement methods and procedures actually applied : | |
| Any comment: | |

**E.7. Application of the monitoring methodology and description of the monitoring plan:**

**E.7.1. Data and parameters to be monitored by each SSC-CPA:**

| **Data / Parameter:** | $EF_{PJ,y}$ |
|---|---|
| Data unit: | tonne |
| Description: | Fuel consumption in project activity in year y. This shall be determined ex post based on monitored values |
| Source of data to be used: | Keep monitoring |
| Value of data applied for the purpose of calculating expected emission reductions in section B.5 | |
| Description of measurement methods and procedures to be applied: | In this section the project participants shall provide description of equipment used for measurement, if applicable, and its accuracy class. |
| QA/QC procedures to be applied: | |
| Any comment: | |

| **Data / Parameter:** | $EE_{PJ,y}$ |
|---|---|
| Data unit: | kWh |
| Description: | Electricity consumption in project activity in year y. This shall be determined ex post based on monitored values |
| Source of data to be used: | Keep monitoring |
| Value of data applied for the purpose of calculating expected emission reductions in section B.5 | |
| Description of measurement methods and procedures to be applied: | In this section the project participants shall provide description of equipment used for measurement, if applicable, and its accuracy class. |
| QA/QC procedures to be applied: | |
| Any comment: | |

| **Data / Parameter:** | $HG^{P}_{j,y}$ |
|---|---|
| Data unit: | TJ/y |
| Description: | Heat supplied by boilers by using fossil fuels in project activity in year y |
| Source of data to be used: | Keep monitoring |
| Value of data applied for the purpose of calculating expected emission reductions in section B.5 | |
| Description of measurement methods and procedures to be applied: | In this section the project participants shall provide description of equipment used for measurement, if applicable, and its accuracy class. |
| QA/QC procedures to be applied: | |
| Any comment: | |

| **Data / Parameter:** | $\eta_{Boiler,j}$ |
|---|---|
| Data unit: | % |
| Description: | Efficiency of generating heat by boilers by using fossil fuels in project activity in year y |
| Source of data to be used: | Keep monitoring |
| Value of data applied for the purpose of calculating expected emission reductions in | |

| | |
|---|---|
| section B.5 | |
| Description of measurement methods and procedures to be applied: | In this section the project participants shall provide description of equipment used for measurement, if applicable, and its accuracy class. |
| QA/QC procedures to be applied: | |
| Any comment: | |

**E.7.2. Description of the monitoring plan for a SSC-CPA:**

>>

The monitoring plan will be responsibly implemented by the project owner; it will ensure the emission reductions of the project during crediting period.

**(1) Monitoring methodology in accordance with the CPA**

Each CPA is an activity that encourages the adoption of energy-efficient tenters in order to reduce greenhouse gas emissions by reducing heat and electricity consumption, which can be applied by the small-scale CDM monitoring methodology AMS II.C.

**(2) Monitoring organization**

The project owner will set up a special CDM group to be in charge of data recordation, collection, supervision and verification. The group director will be trained and supported of technical issues by CDM consultation, the organization of the monitoring group is planned to be set up as follows:

- CDM Group Director: Responsible for developing, operating, monitoring, maintaining and communicating for all the tasks related to the CDM project.
- Data Keeper: Responsible for recording monitored data and to compile periodically.
- Meter Supervisor: Responsible for examination and maintenance of monitored meters, inspection and lead sealing of meters with third party (power grid company).
- Data Auditor: Responsible for supervising and verifying monitored data with power grid company.

**(3) Description of data required to be monitored**

The monitoring plan will identify the various data parameters to be monitored in order to calculate the emission reductions. Data parameters which needs to be monitored will be recorded in the following format.

| Parameter ID | Name of the Data Parameter | Primary source of data for the parameter | Data unit of the parameter |
|---|---|---|---|
| | | | |

**(4) Monitoring equipment and installation**

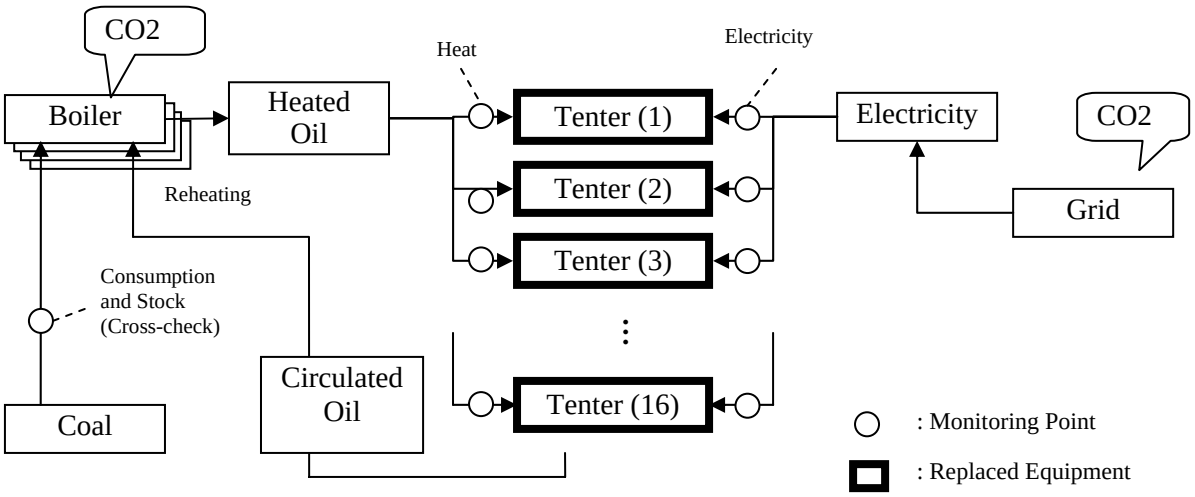


**(5) QA/QC**

Monitoring parameters in each CPA are mainly electricity and heat consumption in tenters. So as to ensure QA/QC (Quality Assurance / Quality Control), the following measures shall be taken:

| | |
|---|---|
| 1. Monitoring equipment: | Installation of electricity meters and flow meters, periodical monitoring and recording |
| 2. Inspection: | The inspection for the monitoring equipments should be implemented according to related standards/regulations. |

**(6) Data management**

Monitoring data which is taken by CDM group should be kept periodically in the paper and electric devices by oneself. These data are provided periodically to the CME, which makes monitoring reports periodically based on these data. Both the project owner (CPA) and the CME shall keep backup data of monitoring data. All of the data shall be saved after 2 years of crediting period.

**(7) Monitoring of scrapping**

In order to explain that the leakage effect of the use of the replaced tenter in another activity is neglected, an independent monitoring of scrapping of replaced tenter needs to be implemented. The monitoring should include recording of the type / serial number/ replaced date of the replaced / introduced tenters, and a check if the number of project activity tenter introduced by the project and the number of scrapped tenter correspond with each other. For the purpose scrapped tenter must be stored until such correspondence has been checked, which is restricted in the “CPA Agreement”. The scrapping of replaced tenter should be documented and independently verified.

**E.8 Date of completion of the application of the baseline study and monitoring methodology and the name of the responsible person(s)/entity(ies)**

>>

## Annex 1

**CONTACT INFORMATION ON COORDINATING/MANAGING ENTITY and PARTICIPANTS IN THE PROGRAMME of ACTIVITIES**

| | |
|---|---|
| Organization: | Greenensign (Beijing) New Energy Technology Ltd. |
| Street/P.O.Box: | |
| Building: | |
| City: | Beijing |
| State/Region: | |
| Postfix/ZIP: | 100007 |
| Country: | People's Republic of China |
| Telephone: | +86-10-58156375-822 |
| FAX: | +86-10-58156379 |
| E-Mail: | lijf@greenensign.com |
| URL: | http://www.greenensign.com |
| Represented by: | Li Jian feng |
| Title: | General Manager |
| Salutation: | Mr |
| Last Name: | Li |
| Middle Name: | |
| First Name: | Jian feng |
| Department: | |
| Mobile: | |
| Direct FAX: | +86-10-58156379 |
| Direct tel: | +86-10-58156375-822 |
| Personal E-Mail: | lijf@greenensign.com |

## Annex 2

**INFORMATION REGARDING PUBLIC FUNDING**

## Annex 3

**BASELINE INFORMATION**

## Annex 4

**MONITORING INFORMATION**

- - - - -